WAFER-TYPE NON-RETURN VALVES
RD40
(5" to 8" – DN 125 to DN 200)

ADCA STEAM EQUIPMENT

DESCRIPTION

The ADCA RD40 disc check valves have a compact design and are specially designed for use with steam and hot condensate.

MAIN FEATURES

Low pressure drop.
Simple and compact design.
Overall lengths according to DIN EN 558-1 (DIN 3202 part 3, series K4).

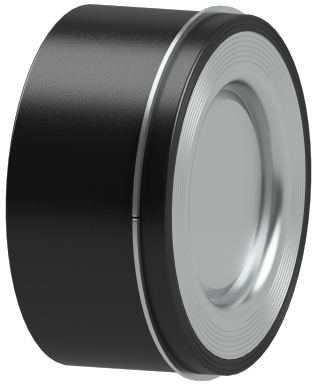

OPTIONS: Various soft sealing options:
EPDM (E), NBR (N), FPM (V), PTFE (T).
Inconel springs.

USE: Saturated steam, water and other gases and liquids compatible with the construction.

AVAILABLE MODELS: RD40 – carbon steel body, stainless steel disc and seat.

SIZES: 5" to 8"; DN 125 to DN 200.

CONNECTIONS: Sandwiched between flanges as per EN 1092 or ASME.

INSTALLATION: Horizontal or vertical installation.
See IMI – Installation and maintenance instructions.

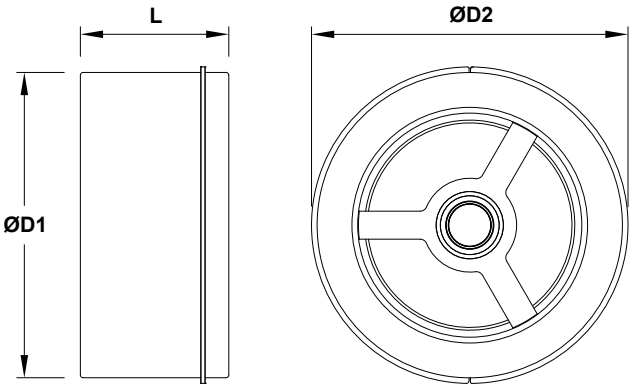

DIMENSIONS							
SIZE	PN 10/16	PN 40		CLASS 150	CLASS 300	L	WGT. (kg)
	ØD1	ØD1	ØD2 *	ØD1	ØD2 *		
5" – DN 125	192	192	–	192	212	90	10
6" – DN 150	218	–	226	218	247	106	14
8" – DN 200	273	–	290	273	304	140	24

* Centering ring required

CE MARKING – GROUP 2 (PED – European Directive)	
PN 40	**Category**
DN 125 to 200	2 (CE marked)

BODY LIMITING CONDITIONS	
WAFER PN 40 *	
ALLOWABLE PRESSURE	**RELATED TEMPERATURE**
40 bar	100 ºC
33,7 bar	200 ºC
31,8 bar	250 ºC
29,7 bar	300 ºC

* According to EN 1092.
Minimum operating temperature: - 10 ºC.

RECOMMENDED LIMITS OF OPERATION WITH SOFT SEALS			
EPDM (E)	**NBR (N)**	**FPM (V)**	**PTFE (T)**
130 ºC	95 ºC	180 ºC	180 ºC

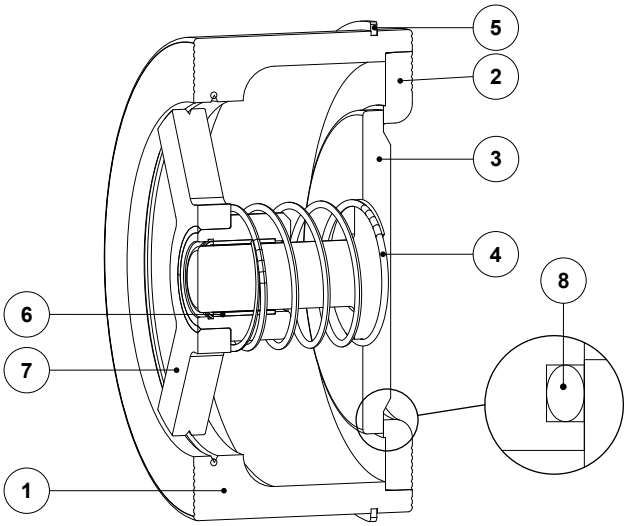

MATERIALS		
POS. Nº	**DESIGNATION**	**MATERIAL**
1	Body	S355JR / 1.0045
2	Seat	AISI 316 / 1.4401
3	* Disc	AISI 316 / 1.4401
4	* Spring	AISI 302 / 1.4300
5	Centering ring	AISI 304 / 1.4301
6	Bearing	Steel Fe Zn
7	Star	S355JR / 1.0045
8	* Soft seal	EPDM; NBR; FPM; PTFE

* Available spare parts.

MINIMUM OPENING PRESSURES WITH STANDARD SPRING (mbar)			
SIZE	**D.P. ↑**	**D.P. ⟶**	**D.P. ↓**
5" – DN 125	37	22	7
6" – DN 150	40	25	10
8" – DN 200	46	28	10

→ : Flow direction.

PRESSURE DROP, HORIZONTAL FLOW, STANDARD SPRING (WATER AT 20º)

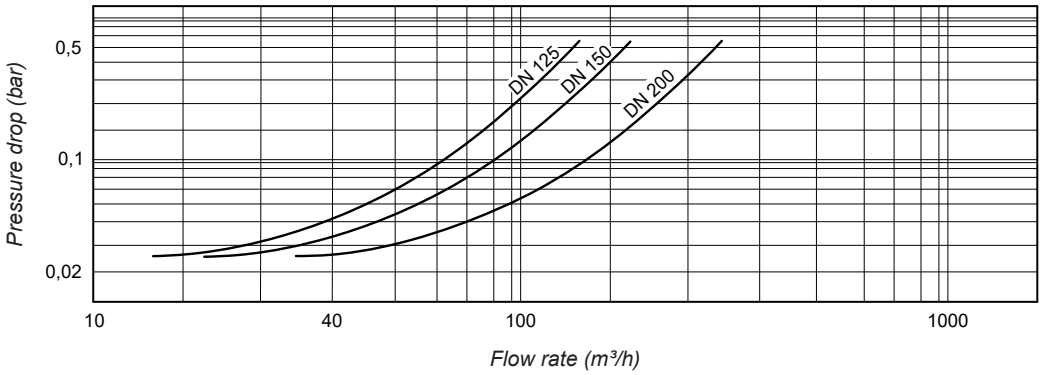

To determine the pressure drop of other mediums the equivalent water flow volume has to be calculated: $V_w = \sqrt{\frac{Q}{1000}} \times V$

Vw = Equivalent water flow volume in m³/h; Q = Density in kg/m³; V = Flow volume in m³/h